Brickcom

Megapixel
Bullet Network Camera

OB-100A Series

- H.264, MPEG-4 and MJPEG Triple Codec Compression with Dual Simultaneous Streaming
- Power over Ethernet
- Built-in Micro SD/SDHC Memory Card Slot for Local Storage (*)
- 1 DI/DO for External Alarm and Sensor Device
- Smart Focus to get excellent image quality easily (*)
- IEEE 802.11a/b/g/n Compliance (*)
- Built-in 3G SIM slot (*)
- IP67 Outdoor enclosure Built-in Fan and Heater (*)

Dimension Diagram (OB-100Ap Series)

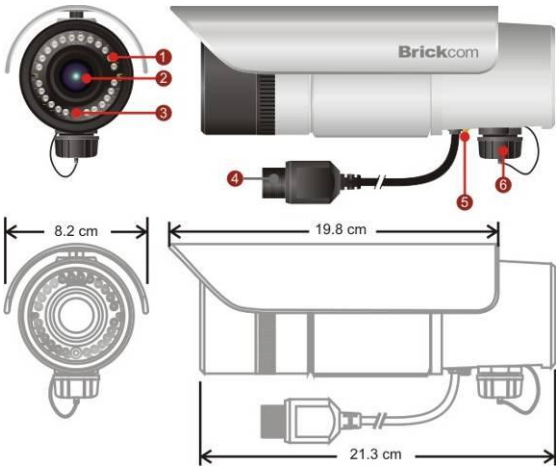

1. IR LED
2. Lens
3. Light Sensor
4. RJ45 Connector 1 (for Ethernet and High Power POE)
5. Antenna Connector
6. RJ45 Connector 2 (for Audio in/out, RS485, DIDO)

Dimension Diagram (OB-100Ae Series)

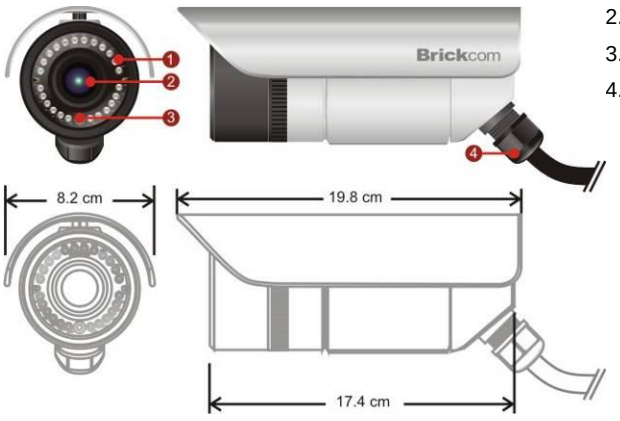

1. IR LED
2. Lens
3. Light Sensor
4. IO Interface

Camera Accessories

CI-807 / CI-812 (OB-100AP)
Camera Stand

GEM04-222008A
Wi-Fi Dual Band Omni Antenna

GEM07-15072A
3G Antenna

GEM04-222060
Wi-Fi Dual Band Antenna

GEM04-222070
Wi-Fi Dual Band Patch Antenna

Network Equipments

DWRT-600N
Dual-Band Wireless N Router

POE30U
PoE Injector

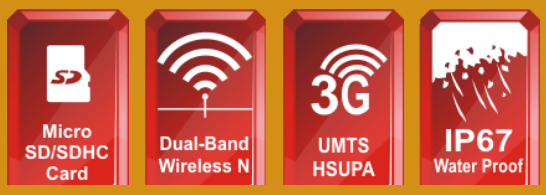

Brickcom | www.brickcom.com

OB-100A Series

Camera

Model Number	**OB-100Ae** - Outdoor/ Megapixel/ IR LED/ 2 Way Audio/ Ethernet/ POE/ DIDO/ RS485/ Weather-Proof **WOB-100Ae** - Outdoor/ Megapixel/ IR LED/ 2 way Audio/ Ethernet/ POE/ Wi-Fi/ DIDO/ RS485/ Weather-Proof **OB-100Ap** - Outdoor/ Megapixel/ IR LED/ 2 way Audio/ Micro SDHC/ Ethernet/ POE/ DIDO/ RS485/ Weather-Proof/ Smart Focus **WOB-100Ap** - Outdoor/ Megapixel/ IR LED/ 2 way Audio/ Micro SDHC/ Ethernet/ POE/ Wi-Fi/ DIDO/ RS485/ Weather-Proof/ Smart Focus **GOB-100Ap** - Outdoor/ Megapixel/ IR LED/ 2 way Audio/ Micro SDHC/ Ethernet/ POE/ 3G/ DIDO/ RS485/ Weather-Proof/ Smart Focus
Hardware System	CPU: 500 MHz Flash: 16M RAM: 128M DDR**(OB-100Ap/ WOB-100Ap/ GOB-100Ap)** RAM: 64M DDR**(OB-100Ae/ WOB-100Ae)**
Image Sensor	Sensor Type : 1/4" CMOS Megapixel Sensor Sensor Resolution : 1280 x 800 pixel Minimum Illumination : 1 Lux (F1.6,Color) 0 Lux (IR ON,B/W)
Lens	Lens Type : Motor-focal with Auto-Iris IR Corrective Focal Length: f= 3.3~12 mm, 3.6X View Angle (H): 70° ~22° (V): 42° ~14° (D): 85° ~ 25 °
Day & Night Support	Mechanical ICR and 24pcs IR LEDs, triggered by sensor IR distance: 15m IR wavelength: 850nm Bean Angle: 40°

Video

Video Image Compression	H.264 / MPEG4 / MJPEG
Video Setting	Auto Exposure Control: Sport, Normal, Night Vision, User Defined Auto Gain Control: 1X~5X Shutter Speed: 1/5~1/20000
S/N Ratio	39dB
Image Resolution	**16:10:**1280 x 800/640 x 400/320 x 192 **16:9:**1280 x 720/640 x 352/320 x 176 **4:3**:640 x 480/320 x 240
Frame Rate at Max. Resolution	**OB-100Ae/ WOB-100Ae** H.264: 15 fps MPEG4: 15 fps MJPEG: 30 fps **OB-100Ap/ WOB-100Ap/ GOB-100Ap** H.264: 30 fps MPEG4: 15 fps

Audio

Audio Streaming	Two-way audio support
Audio Compression	G.711, AMR (8 kHz, Mono, PCM)
Audio Input/Output	External microphone or line input (Unbalanced, 1.4 Vp-p, 1 Vrms)/ Line output

Network

Communication	Ethernet : one 10/100Mbps RJ-45 IEEE 802.11a/b/g/n compliance **(WOB-100Ap/ WOB-100Ae)** HSUPA/UMTS 850/1900/2100 **(GOB-100Ap)** Supported Protocols : TCP/IP, UDP, ICMP, DHCP, NTP, DNS, DDNS, SMTP, FTP, HTTP, Samba, PPPoE, UPnP, RTP, RTSP, RTCP, Wireless 802.11 a/b/g/n **(WOB-100Ap)**

General

Interface & Buttons	**OB-100Ae/ WOB-100Ae** DC Power Connector Ethernet Cable Connector Terminal Block1 (General I/O) Terminal Block2 (AC24V, RS485) External MIC/Line Input External Audio output Reset Button **WPS Button (WOB-100Ae)** Detachable Antenna Connector **(WOB-100Ae)** **OB-100Ap/ WOB-100Ap/ GOB-100Ap** RJ45 connector1 (for Ethernet and High power POE) RJ45 connector2 (for Audio in/out,RS485, DIDO) Reset button External Antenna reserve SMA connector **(WOB-100Ap)** Micro SD/SDHC memory card slot **(GOB-100Ap)** 3G SIM slot
Power input	**OB-100Ae/ WOB-100Ae** 802.3af (PoE)/AC24V/DC12V/1A **OB-100Ap/ WOB-100Ap/ GOB-100Ap** 802.3at(PoE) / DC48V/0.8A
LEDs	Status (Power/Link)
Max. Power consumption	**OB-100Ae/ WOB-100Ae** 7 watts(DC12V 1A) 9 watts(PoE802.3af) **OB-100Ap/ WOB-100Ap/ GOB-100Ap** 10 watts(PoE802.3af) 11 watts(PoE802.3at)
Environment	Water Proof: IP67 **OB-100Ae/ WOB-100Ae** Operating Temperature : -20°C ~ 50°C (-4°F ~122°F) **OB-100Ap/ WOB-100Ap/ GOB-100Ap** Operating Temperature : -40°C ~ 60°C (-40°F ~140°F), build in fan and heater
Dimension	**OB-100Ae/ WOB-100Ae** - 82(D) * 174(H) mm **OB-100Ap/ WOB-100Ap/ GOB-100Ap** - 82(D) * 213(H) mm
Weight	**OB-100Ae/ OB-100Ap** Net: 1100 g **WOB-100Ae /WOB-100Ap/GOB-100Ap** Net: 1150 g
Humidity	10% ~ 80%
Certification	FCC, CE
Warranty	Limited 2-year warranty

Brickcom Corporation Headquarters
Address: No.1 Jen Ai Rd, Hsinchu Industrial Park, Hukou, Hsinchu, Taiwan, R.O.C. 303 Tel: + 886-3-5982022 Fax: + 886-3-5982023
Mail: info@brickcom.com http://www.brickcom.com

(*) These are optional features. Please refer to the Buying Guide for the full list of optional features available for this product.